STRUCTURAL STEEL NOTES

1) ALL MISCELLANEOUS STRUCTURAL STEEL PLATES AND SECTIONS SHALL CONFORM TO ASTM A-36.
2) STRUCTURAL STEEL PIPE SHALL CONFORM TO ASTM A-53, TYPE E OR S, GRADE B OR ASTM 501.
3) STRUCTURAL STEEL TUBING SHALL CONFORM TO ASTM A500 GRADE B.
4) ALL DETAILING SHALL CONFORM TO CURRENT AISC SPECIFICATIONS.
5) ALL WELDING SHALL CONFORM TO CURRENT AMERICAN WELDING SOCIETY SPECIFICATIONS FOR MATERIAL BEING WELDED AND BE PERFORMED BY CERTIFIED WELDERS.
6) ALL BOLTS SHALL BE UNFINISHED ASTM A-307, UNLESS OTHERWISE NOTED.
7) ALL STRUCTURAL STEEL ANS MISCELLANEOUS IRON NOT ENCASED IN CONCRETE SHALL RECEIVE ONE SHOP COAT OF APPROVED PRIMER PAINT.

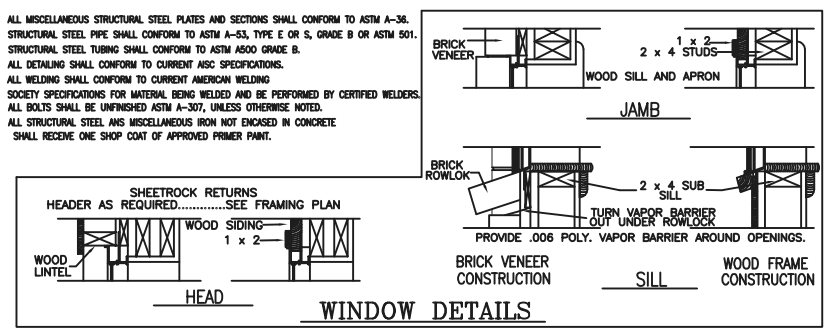

WINDOW DETAILS

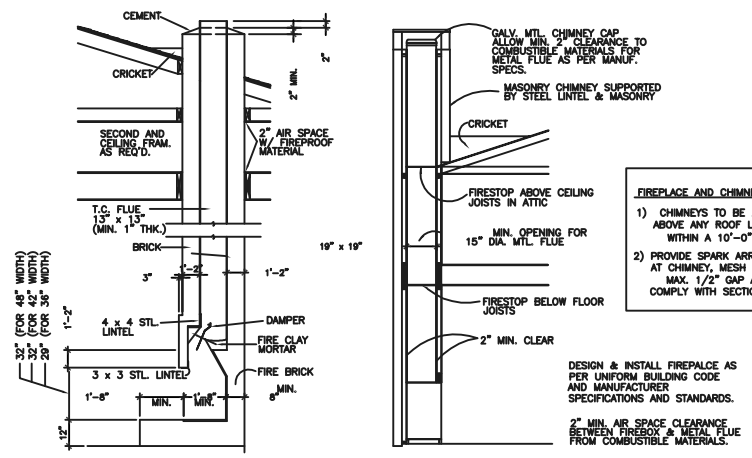

FIREPLACE AND CHIMNEY NOTES

1) CHIMNEYS TO BE 2'-0" (MIN.) ABOVE ANY ROOF LINE WITHIN A 10'-0" RADIUS.
2) PROVIDE SPARK ARRESTORS AT CHIMNEY, MESH TO HAVE MAX. 1/2" GAP AND MUST COMPLY WITH SECTION 3703F.

DESIGN & INSTALL FIREPALCE AS PER UNIFORM BUILDING CODE AND MANUFACTURER SPECIFICATIONS AND STANDARDS.

2" MIN. AIR SPACE CLEARANCE BETWEEN FIREBOX & METAL FLUE FROM COMBUSTIBLE MATERIALS.

FIREPLACE DETAILS

GENERAL NOTES

1) DO NOT SCALE DRAWINGS. WRITTEN DIMENSIONS TAKE PRECEDENCE. CONTRACTOR TO VERIFY AND BE RESPONSIBLE FOR ALL DIMENSIONS AND CONDITIONS ON THE JOB AND NOTIFY THE ENGINEER OF ANY VARIATIONS FROM THE DIMENSIONS OR CONDITIONS SHOWN ON THE DRAWINGS.
2) ALL WRITTEN NOTES ON THESE DRAWINGS SHALL TAKE PRECEDENCE OVER THE MINIMUM STANDARD NOTES DETAILED ON THIS STANDARD SECTIONS/DETAILS SHEET .
3) ALL BEDROOM WINDOWS TO BE MAX 44" A.F.F., MIN. 24" HIGH X 20" WIDE WITH 5.7 SQ. FT. NET CLEAR OPENING.
4) STAIRWAYS SHALL COMPLY WITH BUILDING CODE (U.B.C. 3306 A THROUGH C OR EQUIVALENT) MIN. WIDTH BETWEEN
5) HANDRAILS TO BE 34" TO 38" ABOVE NOSE OF TREAD
6) GUARDRAIL TO BE 36" TO 42" A.F.F. WITH BALUSTERS AT 5" O.C. MAX.
7) HANDGRIPPING PORTION OF HANDRAILS SHALL BE NOT LESS THAN 1-1/2", NOR MORE THAN 2" IN CROSS SECTION OR THE SHAPE SHALL PROVIDE AN EQUIVALENT GRIPPING SURFACE (U.B.C. 3306I)
8) ENCLOSE UNDERSIDE OF ALL STAIRWELLS WITH 5/8" TYPE "X" FIRE RATED GYPSUM BOARD
9) SMOKE DETECTORS REQUIRE 110V CONNECTION TO HOUSE WIRING

11) PROVIDE PLUMBING ACCESS PANEL AT ALL BATHTUBS BY PLUMBING CODE 82 (83 AND 84 REV.) SEC. 905.2 AND 905.3
12) ALL GLASS AT TUB AND SHOWERS SHALL BE TEMPERED SAFETY GLASS AND MUST COMPLY WITH BUILDING CODE (U.B.C. 5406 A THROUGH D AND 54.2 PART 1 OR EQUIVALENT)
13) PROVIDE VENTILATION AT ALL BATHS AND UTILITY ROOMS THRU NATURAL OR MECHANICAL MEANS AND COMPLY WITH BUILDING CODE (U.B.C. 1205 C OR EQUIVALENT)
14) ATTIC ACCESS IS PROVIDED ON PLAN TO SERVICE MECHANICAL EQUIPMENT AND LIMITED LIGHT STORAGE BUT IN NO CASE SHALL THE COMBINED DECKED ATTIC AREAS EXCEED 500 SQ. FT.
15) LOCATE WATER HEATER IN ATTIC ABOVE LOAD BEARING PARTITION IN PAN WITH RELIEF DRAIN LINE TO OUTSIDE

MASONRY NOTES:

1) ALL CONCRETE MASONRY UNITS SHALL CONFORM TO ASTM C90 GRADE N.
2) MORTAR FOR CONCRETE MASONRY SHALL CONFORM TO ASTM C279 TYPE S.
3) GROUT FOR CONCRETE MASONRY SHALL BE IN ACCORDANCE WITH U.B.C. SECTION 2403(d). MINIMUM 28 DAY COMPRESSIVE STRENGTH SHALL NOT BE LESS THAN 2000 PSI.
4) ALL WALLS SHALL BE GROUTED SOLID. GROUT SHALL BE VIBRATED INTO PLACE AND SHALL BE PLACED IN LIFTS NOT EXCEEDING 4' UNLESS APPROPRIATE CLEAN OUT HOLES ARE PROVIDED . WITH THE UBC NATIONAL BUILDING CODE.
5) PROVIDE BOND BREAKER AT MASONRY BEARING OF ALL CAST-IN-PLACE CONCRETE SLABS WITH BUILDING PAPER OR AS OTHERWISE DETAILED.

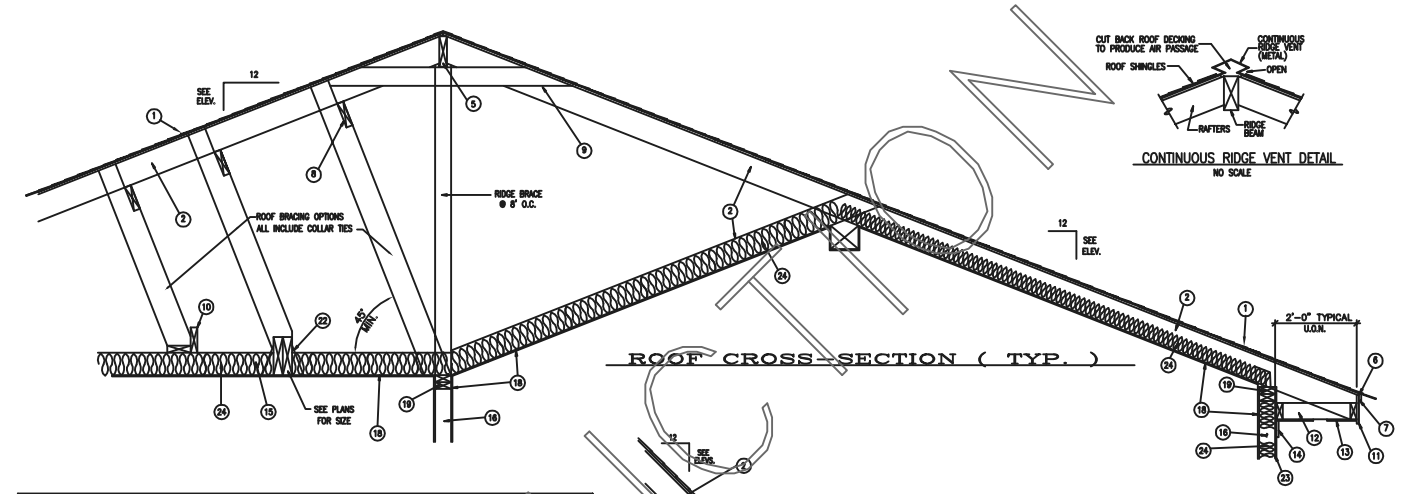

ROOF CROSS-SECTION (TYP.)

STEEL ANGLE LINTEL SCHEDULE

MAXIMUM ALLOWANCE HEIGHT OF SUPPORTED BRICK FOR LINTELS
HEIGHT (IN FEET) – [MINIMUM BEARING AT EACH END (IN INCHES)]

OPENING WIDTH (IN FT.)	3"x 3"x 3/16"	3"x 3"x 1/4"	5"x 3"x 5/16"	6"x 4"x 3/8"	6"x 3 1/2"x 3/8" + MC 10"x 8.4#	6"x 3 1/3"x 3/8" + MC 12"x 10.6#
0–3	34 [4]	–	–	–	–	–
4	10 [4]	12.5 [4]	–	–	–	–
5	5 [4]	6.5 [4]	–	–	–	–
6	5 [4]	4 [4]	19 [8]	–	–	–
7	2 [4]	2.5 [4]	12 [6]		–	–
8	–	–	8 [6]	17 [8]	–	–
9	–	–	5.5 [4]	12 [6]	–	–
10	–	–	4 [4]	9 [6]	–	–
12	–	–	2.5 [4]	5 [4]	16 [12]	–
14	–	–	1.5 [4]	3 [4]	10 [10]	15.5 [14]
16	–	–	1.0 [4]	2 [4]	7 [8]	10.5 [12]
18	–	–	0.7 [4]	1.5 [4]	4.5 [6]	7.5 [10]

*COMBINATION LINTELS SHALL BE WELDED TOGETHER W/ 2" LONG WELDS AT 12" O.C. TOP & BOTTOM

FRAMING SPAN TABLES

OBTAINED FROM SPIB STANDARD GRADING RULES FOR SOUTHERN PINE LUMBER, 1991 EDITION

COMPONENT	SIZE	#2 GRADE S.Y.P. 19% M.C. 12" O.C.	#2 GRADE S.Y.P. 19% M.C. 16" O.C.	#2 GRADE S.Y.P. 19% M.C. 24" O.C.	#3 GRADE S.Y.P. 19% M.C. 12" O.C.	#3 GRADE S.Y.P. 19% M.C. 16" O.C.	#3 GRADE S.Y.P. 19% M.C. 24" O.C.
FLOOR JOISTS 40 PSF LL & 10 PSF DL	2X6	10'-9"	9'-9"	8'-6"	9'-4"	8'-1"	6'-7"
	2-8	14'-2"	12'-10"	11'-0"	11'-11"	10'-3"	8'-5"
	2X10	18'-0"	16'-1"	13'-2"	14'-0"	12'-2"	9'-11"
	2X12	21'-9"	18'-10"	15'-4"	16'-8"	14'-5"	11'-10"
CEILING JOISTS 10 PSF LL & 5 PSF DL (NO ROOF LOADS)	2X6	19'-6"	17'-8"	15'-6"	17'-1"	14'-9"	12'-1"
	2-8	–	23'-4"	20'-1"	21'-8"	18'-9"	15'-4"
	2X10	–	–	24'-0"	–	22'-2"	18'-1"
RAFTERS – SLOPES OVER 3:12, 20 PSF LL & 15 PSF DL, COMPOSITION SHINGLES	2X6	15'-6"	14'-1"	11'-9"	12'-11"	11'-2"	9'-1"
	2-8	20'-5"	18'-6"	15'-3"	16'-5"	14'-3"	11'-7"
	2X10	–	22'-3"	18'-2"	19'-5"	16'-10"	13'-9"
RAFTERS – SLOPES OVER 3:12, 20 PSF LL & 15 PSF DL, TILE ROOF OR SH. RK. CLB.	2X6	15'-5"	13'-4"	10'-11"	11'-11"	10'-4"	8'-5"
	2-8	19'-11"	17'-3"	14'-1"	15'-3"	13'-2"	10'-9"
	2X10	23'-10"	20'-7"	16'-10"	18'-0"	15'-7"	12'-9"
HEADER SCHEDULE	HEADER SIZE	2 – 2X6	2 – 2X8	2 – 2X10	2 – 2X12		
	MAXIMUM SPAN	4'-6"	6'-0"	7'-6"	9'-0"		

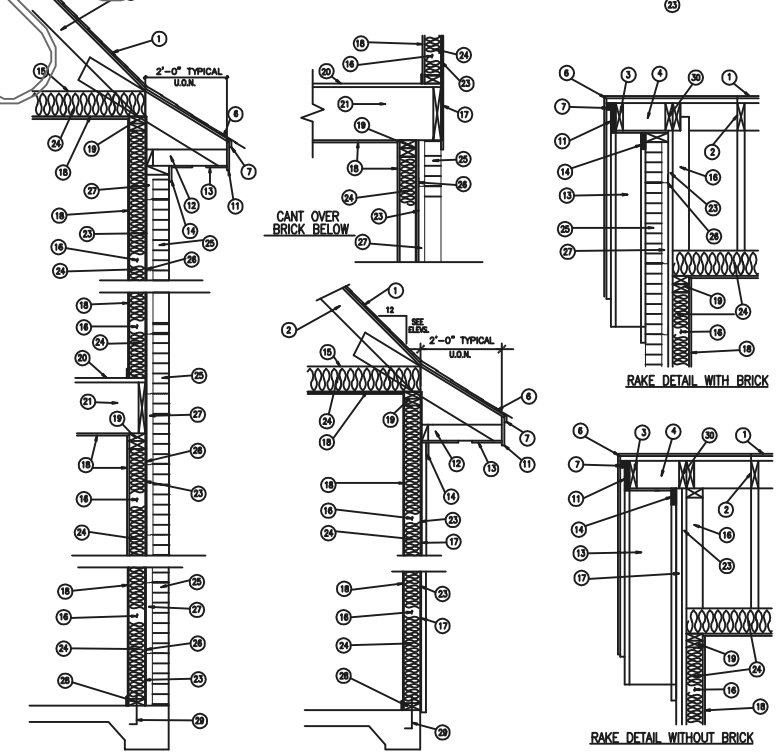

Entire project shall be constructed in accordance with 2003 I.R.C. and the 2002 NEC

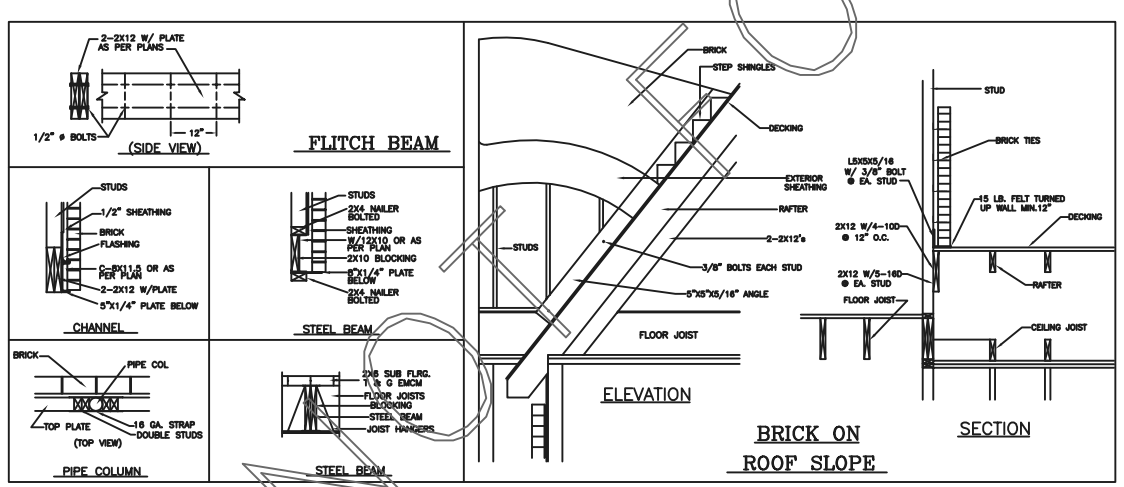

STEEL NOTES AND DETAILS

GENERAL FRAMING NOTES

1) ALL FRAMING LUMBER SHALL BE SOUTHERN YELLOW PINE #2 OR BETTER UNLESS OTHERWISE NOTED ON PLAN. STUDS & PLATES MAY BE CONSTRUCTION GR. MATERIAL 6X MATERIAL SHALL BE SOUTHERN YELLOW PINE #1 SR OR BETTER.
2) PLYWOOD SHEATHING SHALL BE MANUFACTURED WITH EXTERIOR GLUE IN ACCORDANCE WITH REQUIREMENTS OF THE 1994 BOCA BLDG CODE AND AMERICAN PLYWOOD ASSOCIATION STD. PSI-83 THE GRADE, THICKNESS, AND PANEL IDENTIFICATION INDEX SHALL BE AS SHOWN ON THE PLANS.
3) ALL GLUE LAMINATED BEAMS SHALL BE STRESS GRADE 24F-V3 UNLESS OTHERWISE NOTED ON PLANS
4) ALL FRAMING CLIPS AND DEVICES SHALL BE SIMPSON "STRONG TIE" OR EQUIVALENT
5) MINIMUM NAILING FOR CONNECTIONS NOT INDICATED ON THE PLANS SHALL BE IN ACCORDANCE WITH TABLE 25-Q' OF THE U.B.C.
6) TRUSS JOISTS SHALL BE MANUFACTURED AND INSTALLED IN ACCORDANCE WITH THE REQUIREMENTS OF THE MANUFACTURER
7) ALL NAILS SHALL BE COMMON, UNLESS OTHERWISE NOTED
8) POSTS USED FOR BEAM OR GIRDER SUPPORTS SHALL HAVE FULL BEARING TO THE FOUNDATION, UNLESS OTHERWISE NOTED
9) TIMBER SIZES PRESCRIBED ARE MINIMUM. LARGER SIZES MAY BE SUBSTITUTED. DETAILED CONNECTIONS MAY REQUIRE MODIFICATION IF SUBSTITUTIONS ARE MADE
10) PROVIDE 2-2X6 STRONGBACK ON ALL SPANS OVER 10'-0"
11) PROVIDE DOUBLE JOISTS UNDER ALL PARALLEL PARTITIONS
12) PROVIDE CORNER BRACING – USE 1X4'S AT 45' OR 1/2" C-D EXT. PLYWOOD
13) RECOMMENDED EXPANDING FOAM SEALER (POLYSEAL OR EQUAL) TO SEAL ALL POSSIBLE INFILTRATION
14) 1 X 3 OR SOLID 2X12 CROSSBRIDGING ON SPANS OVER 10'-0"
15) PROVIDE FIRE BREAKS IN WALLS GREATER THAN 10'-0" IN HEIGHT AND ON BOTH SIDES OF ALL FLOOR PENETRATIONS.

FRAMING DETAILS LEGEND

1) COMPOSITION SHINGLES (MIN 240#, MAX 360#) ON 15# FELT OVER 5/8" CDX PLYWOOD DECKING (TYPICAL).
2) RAFTERS (2X6 TYP.) WITH LAP SPLICE AS REQ'D. BY SPAN TABLES . SEE ELEVATIONS FOR SLOPE. MAXIMUM UNSUPPORTED SPAN FOR 2X6 RAFTERS SHALL BE 10'-7".
3) 2X4 BARGE RAFTER W/ 1X6 FACIA OR 2X6 BARGE RAFTER W/ 1X8 FASCIA
4) 2X6 BLOCKING AT 24" O.C.
5) RIDGE, HIP, OR VALLEY BEAMS TO BE 1 SIZE LARGER THAN RAFTERS
6) GALVANIZED FLASHING (DRIP EDGE)
7) 1X2 TRIM
8) 2X6 CONT. PURLINS W/ 2X6 BRACES @ 48" O.C. (TEE 2X4 BRACES @ 48" O.C. WHEN LENGTH EXCEEDS 8'-0")
9) 2X6 COLLAR TIES AT 32" O.C.
10) N/A
11) 1X8 OR 1X6 FASCIA (SEE PLANS)
12) 2X4 OUTLOOKER AND NAILER
13) 3/8" PLYWOOD SOFFIT W/ VENTS @ 6'-0" O.C. MAX
14) 1X4 TRIM
15) CEILING JOISTS – SEE FRAMING SPAN TABLE. ALL JOISTS SHALL HAVE A MINIMUM BEARING OF 1-1/2" AND HAVE LATERAL SUPPORT AT ENDS AND AT EACH SUPPORT.
16) 2X4 STUD WALL AT 16" O.C. (TYP.). WALLS HIGHER THAN 10' AND WALLS SUPPORTING 2 FLOORS SHALL HAVE 2X6, 2 – 2X4, OR 4X4 STUDS AT 16" O.C.
17) EXTERIOR FINISH MATERIAL – SEE ELEVATIONS FOR TYPE
18) 1/2" GYPSUM BOARD, NAILED @ 7" O.C. (MAX.) W/ 5d COOLER NAILS
19) 2-2X4 TOP PLATE
20) SUBFLOORING – SEE BUILDER OR OWNER FOR SELECTION:
    A) 2X6 TONGUE & GROOVE INSTALLED DIAGONALLY
    B) 1-1/8" APA STURDI-FLOOR PLYWOOD OR EQUAL
    C) 3/4" APA STURDY FLOOR PLYWOOD
21) FLOOR JOISTS – SEE FRAMING SPAN TABLE. ALL JOISTS SHALL HAVE A MINIMUM BEARING OF 1-1/2" & HAVE LATERAL SUPPORT @ ENDS AND AT EACH SUPPORT OR USE SIMPSON "U" JOIST METAL HANGERS.
22) JOIST HANGER
23) EXTERIOR SHEATHING – SEE BUILDER OR OWNER FOR SELECTION
    A) 1/2" EXTERIOR CDX PLYWOOD COVERED WITH TYVEK.
    B) RIGID INSULATION
    C) 2"X8" MP GYPSUM W/ 15# FELT BACKING
24) INSULATION – USE R-13 FOR 2X4 STUD WALLS, R-19 FOR 2 X 6 STUD WALL & R-30 ABOVE CEILING JOISTS IN ATTIC. ALLOW 2" AIR SPACE ABOVE INSULATION OVER SLOPED CEILINGS AND PROVIDE CARDBOARD BAFFLES OVER PLATES.
25) FACE BRICK VENEER – WEEP HOLES AT 36" O.C. AT FIRST COURSE
26) BRICK TIES AT 16" O.C. BOTH WAYS
27) AIR SPACE
28) 2X4 TREATED SOLE PLATE WITH 30# FELT BELOW AND 12" UP WALL
29) 1/2" X 12" ANCHOR BOLT @ 6'-0" MAX. (MINIMUM 2 PER PLATE)
30) CONTINUOUS BAND – SIZE EQUAL TO BARGE RAFTER

HOUSTON PLANS & PERMITS
W3.PLANSANDPERMITS.NET

REL:	BY:	DESCRIPTION:	DATE:	CHECK:
DRAWN:			DATE:	

PROJECT: CLIENT NAME

ADDRESS: PROJECT ADDRESS
Houston, TX 77XXX

Designer Address: 5902 Irvington Blvd. 77009 (713) 691-1555

SHEET NUMBER: